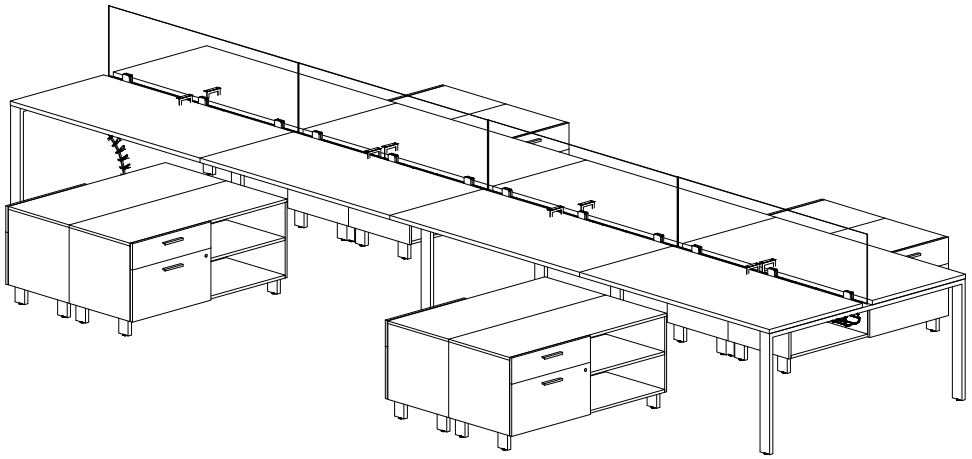

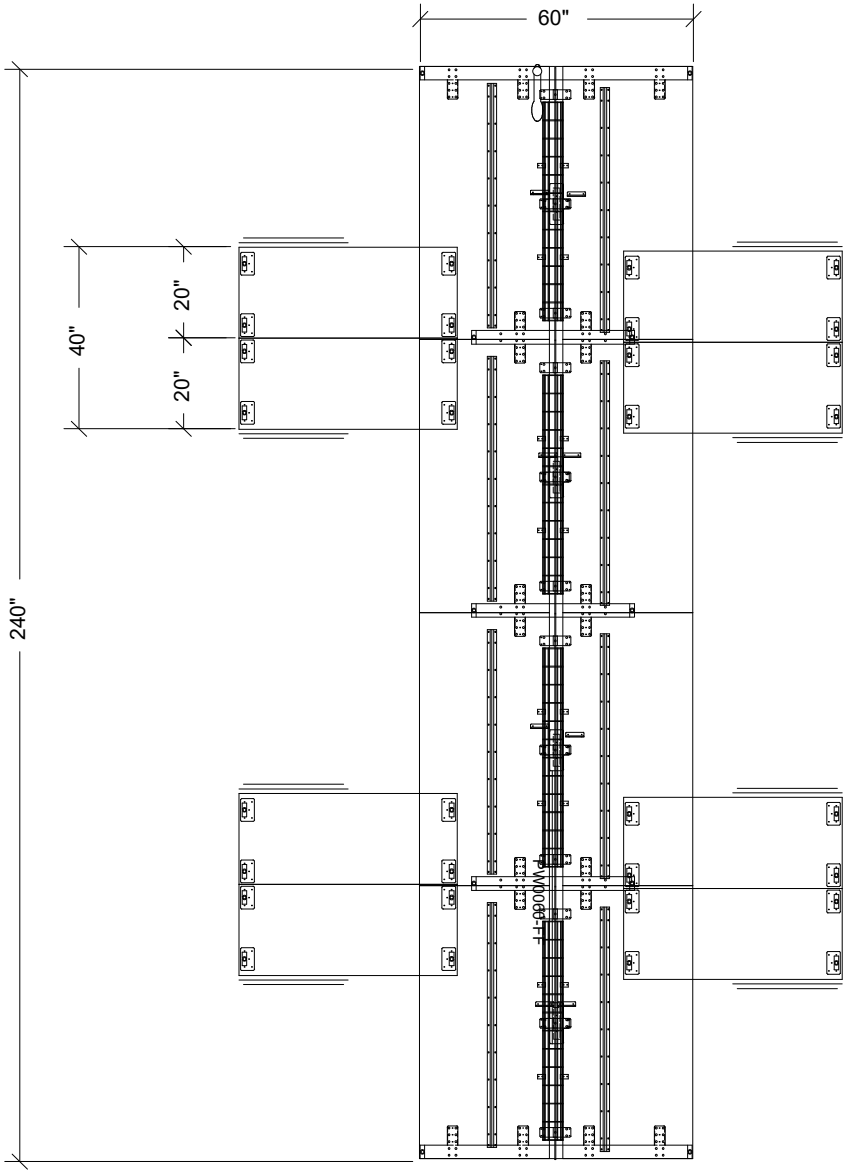
60"
240"
40"
20"
20"
PW0063-FF